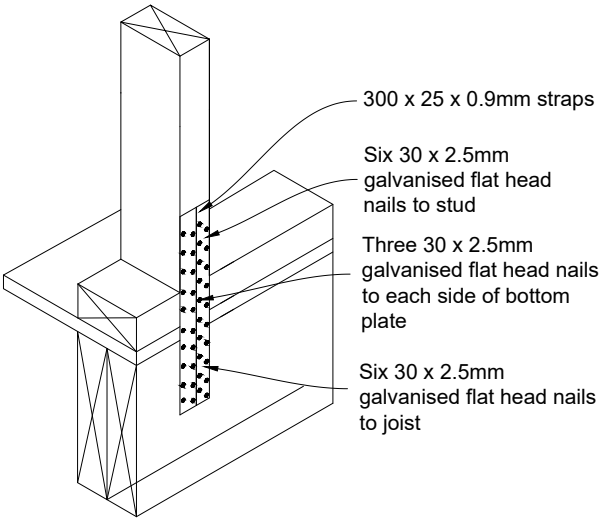
300 x 25 x 0.9mm straps
Six 30 x 2.5mm galvanised flat head nails to stud
Three 30 x 2.5mm galvanised flat head nails to each side of bottom plate
Six 30 x 2.5mm galvanised flat head nails to joist

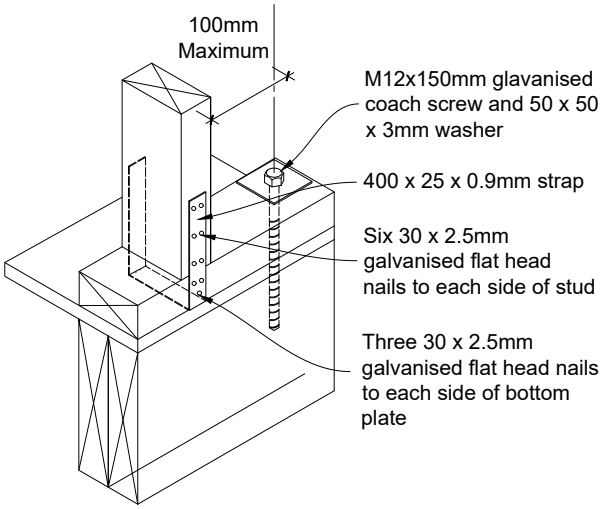
100mm Maximum
M12x150mm glavanised coach screw and 50 x 50 x 3mm washer
400 x 25 x 0.9mm strap
Six 30 x 2.5mm galvanised flat head nails to each side of stud
Three 30 x 2.5mm galvanised flat head nails to each side of bottom plate